TECHNICAL DATA
C SERIES

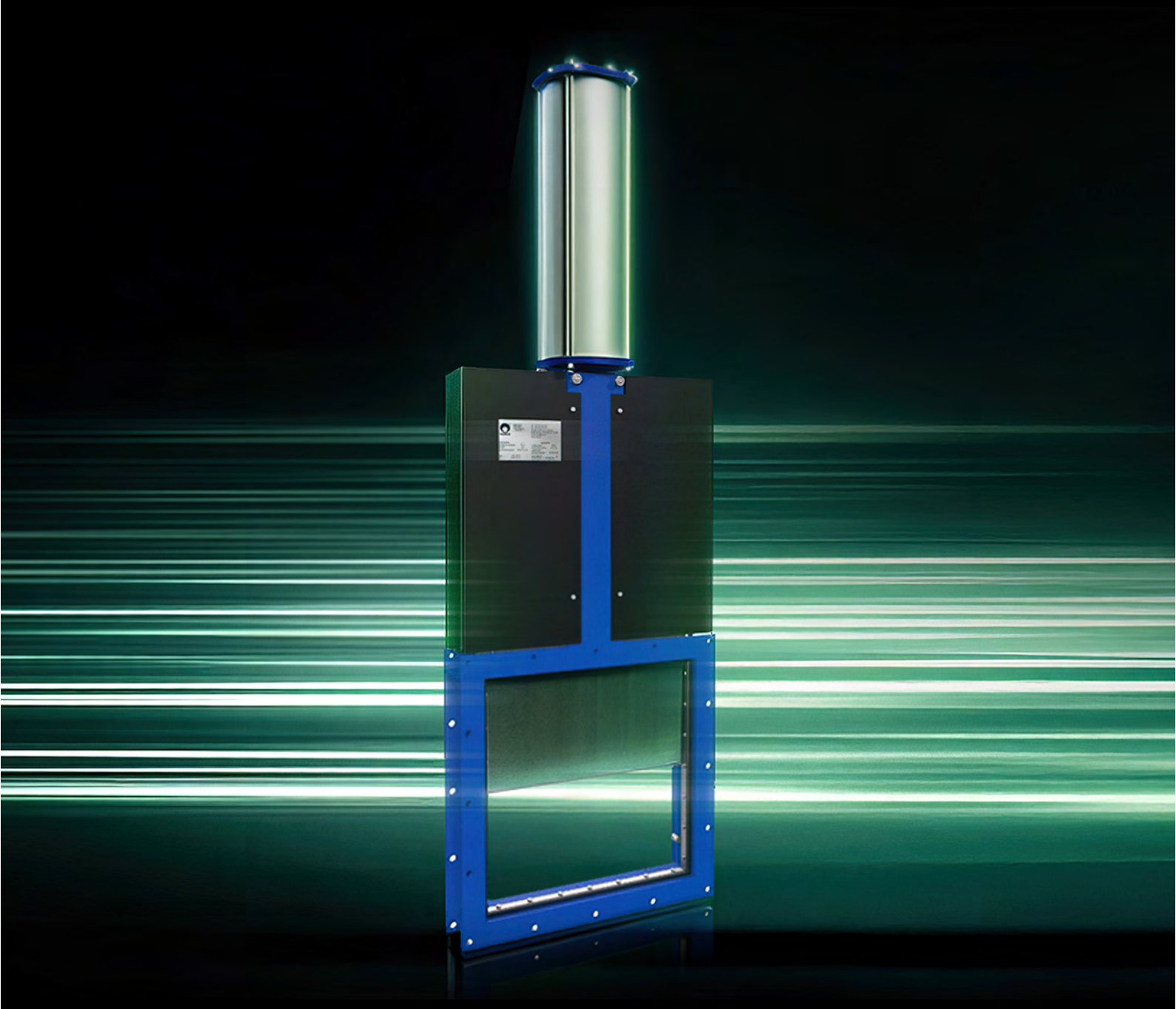

ARNETT
ENGINEERED SOLUTIONS

ARNETT ENGINEERED SOLUTIONS
61 INNOVATION DRIVE, BAMBERG, SC 29003

(844) 785-7585 | SALES@ARNETT.COM

WWW.ARNETT.COM

Rev.02 / 11-07-2024

SQUARE UNIDIRECTIONAL KNIFE GATE VALVE

DESCRIPTION

- Unidirectional knife gate valve.
- Mechanically-welded body.
- Various seat and packing materials available.

GENERAL APPLICATIONS

This knife gate valve is suitable for solids, it is also recommended in gravity discharge applications for fluids with high solid content.

Designed for a wide range of applications such as:

- Mining
- Bulk transport.
- Chemical plants.
- Food Industry.

SIZES

- From 125x125 to 1400x1400.
- Also available in rectangular designs.

** Larger sizes on request*

Fig. 1

WORKING PRESSURE (ΔP)

Standard: 0,6 bar

STANDARD FLANGES

- The connecting flanges are in accordance with **CMO Valves** standard.
- Special connecting flanges can be manufactured on request.
- The connecting flange and the face-to-face dimension can be adapted to the customer's needs.

APPLICATION OF EUROPEAN DIRECTIVES

See document of European Directives applicable to **CMO Valves.**

** For category and zone information, contact technical-commercial department at **CMO Valves.***

QUALITY DOSSIER

- The watertight integrity of the seat area is measured with gauges.
- Material and testing certificates can be supplied on request.

As part of a process of on-going product and service development, **CMO Valves** reserves the right to amend and change the data and content of this document at its discretion at any time without notice. The publication of the latest revision renders all previous documents invalid.

Installation and Maintenance Manual available at **www.cmovalves.com.**

Rev.02 / 11-07-2024

ADVANTAGES

This knife gate valve is specially designed for working with solids and powders. When the valve is open it provides total, continuous flow with no obstructions and allows free discharge of the product. The stem protection hood is independent from the handwheel securing nut, this means the hood can be disassembled without the need to release the handwheel. This advantage allows regular maintenance operations to be performed, such as lubricating the stem, etc.

The stem on the **CMO Valves** valve is made of AISI304 stainless steel. This is another added advantage, as some manufacturers produce it with 13% chrome and it gets rusty very quickly. The handwheel is made of nodular cast iron. Some manufacturers produce them in normal cast iron which can lead to breakages in the event of very high operating torque or knocks.

The yoke is has a compact design with the bronze actuator nut protected in a sealed and lubricated box. This makes it possible to move the valve with a key, even without the handwheel (in other manufacturers' products this is not possible).

The pneumatic actuator's upper and lower covers are made of nodular cast iron, making them highly shock resistant. This characteristic is essential in pneumatic actuators.

The pneumatic cylinder's o-ring seals are commercial products and can be purchased worldwide. This means it is not necessary to contact **CMO Valves** every time a seal is required.

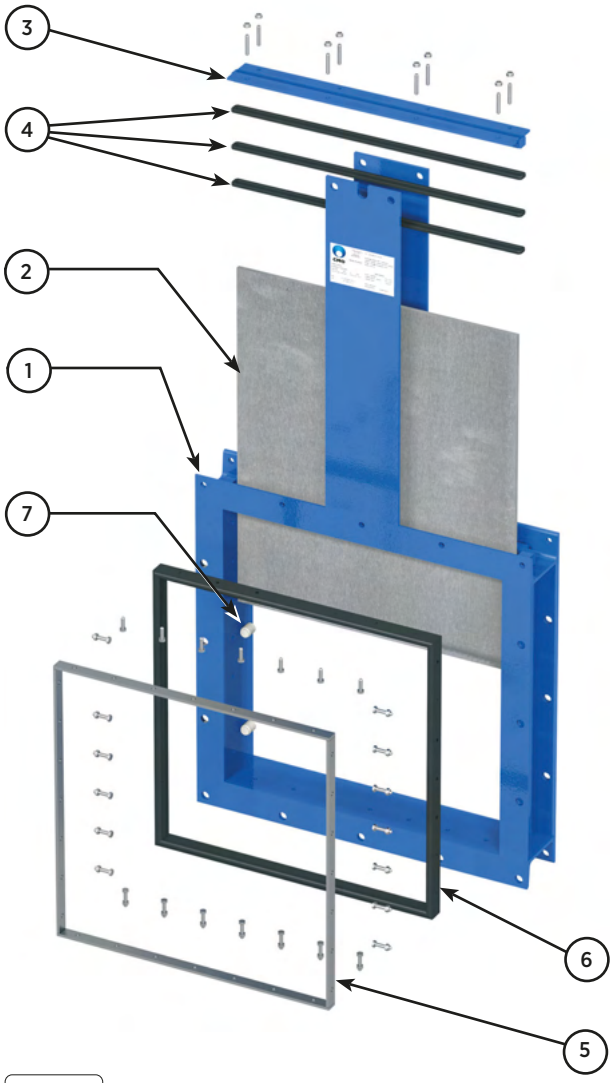

Fig. 2

STANDARD COMPONENTS LIST

COMPONENT	STEEL	STEEL INOX
1 BODY	S275JR	AISI304-AISI316
2 GATE	AISI304	AISI304-AISI316
3 PACKING GLAND	S275JR	AISI304-AISI316
4 PACKING	SINT + PTFE	
5 FLANGE SEAL	AISI304	AISI316
6 SEAL	EPDM	
7 GUIDES	PTFE	

Table. 1

Rev.02 / 11-07-2024

DESIGN FEATURES

1. BODY

- One-piece mechanically welded body, with guides to support the gate and slides.
- The bodies can be square or rectangular.
- **CMO Valves** has a standard design as regards the drilling of the flanges and the face-to-face dimension, but the design of the valve can be adjusted to the dimensions required by the customer.
- The standard manufacturing materials are S275JR carbon steel and AISI304 or AISI316 stainless steel. Other stainless steel alloys such as AISI316Ti, Duplex, 254SMO, Uranus B6, etc. are available on request.
- As a rule, iron or carbon steel valves are painted with an anti-corrosive protection of 80 microns of EPOXY (colour RAL 5015), although other types of anti-corrosive protections are also available.

2. GATE

The standard manufacturing materials are AISI304 stainless steel in valves with carbon steel body and AISI316 stainless steel in valves with AISI316 body. Other materials or combinations can be supplied on request.

The gate is polished on both sides to provide a smooth contact surface with the resilient seat. At the same time, the sharp edges on the gate are rounded to prevent the seal from being cut. Different degrees of polishing, anti-abrasion treatments and modifications are available to adapt the valves to the customer's requirements.

SEALING MATERIALS

The possible materials for the watertight seal are as follows:

EPDM
This is the standard resilient seat fitted on **CMO Valves**. It can be used in many applications, however, it is generally used for water and products diluted in water at temperatures no higher than 90°C (*see note). It can also be used with abrasive products and it provides the valve with 100% watertight integrity.

NITRILE
It is used in fluids containing fats or oils at temperatures no higher than 90°C (*see note). It provides the valve with 100% watertight integrity.

FKM
Suitable for corrosive applications and continuous high temperatures of up to 190°C and peaks of 210°C. It provides the valve with 100% watertight integrity.

SILICONE
Mainly used in the food industry and for pharmaceutical products with temperatures no higher than 200°C. It provides the valve with 100% watertight integrity.

PTFE
Suitable for corrosive applications and pH between 2 and 12. Does not provide the valve with 100% watertight integrity. Estimated leakage: 0.5% of the tube flow.

3. SEAT

The following four types of seats are available according to the working application:

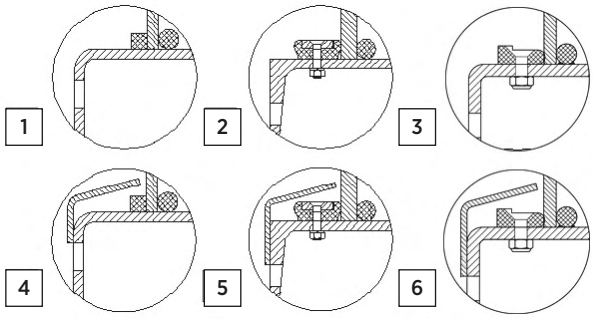

Fig. 3

Note: In some applications other types of resilient materials are used, such as hypalon, butile or natural rubber. Please contact us if you require one of these materials.

SEAT 1
Metal / metal seat.
This type of seat does not include any kind of resilient seat and the estimated leakage (considering water as the test fluid) is 1.5% of the pipe flow.

SEAT 2
Standard soft-seated valve.
This type of seat includes a resilient seat which is fixed to the inside of the body via a stainless steel retaining flange.

ASIENTO 3
Metal seat / PTFE
This type of closure includes a sealing gasket that is attached to the body internally by means of screws.

SEAT 4 / 5 / 6
The same as seats 1, 2 and 3 but including a deflector.
The deflector is a cone-shaped ring located at the valve's entrance with two functions (to protect the valve from abrasion and guide the flow to the centre of the valve). In some applications other types of resilient materials are used, such as hypalon, butile or natural rubber.

Rev.02 / 11-07-2024

4. PACKING

The **CMO Valves** standard packing is composed of a three packing strips which provide watertight integrity between the body and the gate, preventing any type of leakage to the atmosphere.

It is located in an easily accessible place and can be replaced without dismantling the valve from the pipeline.

Below we indicate various types of packing available according to the application to be given to the valve :

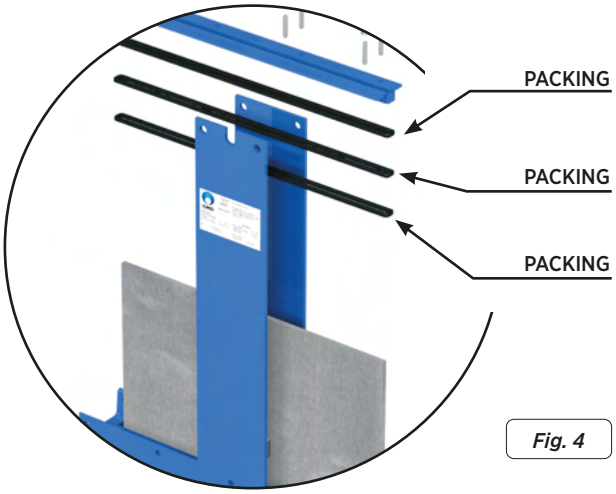

Fig. 4

1. **GREASED COTTON (Recommended for hydraulic services):**
   This packing is composed of braided cotton fibres soaked in grease both inside and out. It is for general use in hydraulic applications in both pumps and valves.

2. **DRY COTTON**
   This packing is composed of cotton fibres. It is for general use in hydraulic applications with solids.

3. **COTTON + PTFE**
   This packing is composed of braided cotton fibres soaked in PTFE both inside and out. It is for general use in hydraulic applications in both pumps and valves.

4. **SYNTHETIC + PTFE**
   This packing is composed of braided synthetic fibres soaked in PTFE both inside and out. It is for general use in hydraulic applications in both pumps and valves and in all types of fluids, especially with the corrosive ones, including concentrated and oxidising oils. It is also used in liquids with solid particles in suspension.

5. **GRAPHITE**
   This packing is composed of high-purity graphite fibres. A diagonal braiding system is used and it is impregnated with graphite and lubricant which helps to reduce porosity and improve operation. It has a wide range of applications as graphite is resistant to steam, water, oils, solvents, alkali and most acids.

6. **CERAMIC FIBER**
   This packing is composed of ceramic material fibres. Its main applications are with air or gas at high temperatures and low pressures.

SEAT/SEALS			PACKING			
MATERIAL	**Tª MÁX (ºC)**	**APPLICATIONS**	**MATERIAL**	**P(Bar)**	**Tª. MÁX**	**pH**
EPDM (E)	90 *	Water, acids and non-min.. oils.	Greased cotton	10	100	6-8
Nitrile (N)	90 *	Hydrocarbons, oils and greases	Dry cotton (AS)	0,5	100	6-8
FKM (V)	190	Hydrocarbons and solvents	Cotton + PTFE	30	120	6-8
Silicone (S)	200	Food Products	Synthetic + PTFE	100	-200+270	0-14
PTFE	250	Corrosion resistant	Graphite	40	650	0-14
Note: More details and other materials available on reques			Ceramic Fibre	0,3	1400	0-14
*** EPDM and nitrile: is possible until serving temperature Max.: 120°C under request**						

Table. 2

5. STEM

The stem on the **CMO Valves** valve is made of AISI 304 stainless steel. This characteristic provides high resistance and excellent corrosion-resistant properties. The valve design can be rising stem or non-rising stem. When a rising stem is required for the valve a stem hood is supplied to protect the stem from contact with dust and dirt, besides keeping it lubricated.

Rev.02 / 11-07-2024

6. PACKING GLAND

The packing gland allows uniform force and pressure to be applied to the packing to ensure watertight integrity.

As standard, valves with carbon steel body include carbon steel packing glands, whilst valves with stainless steel body have stainless steel packing glands.

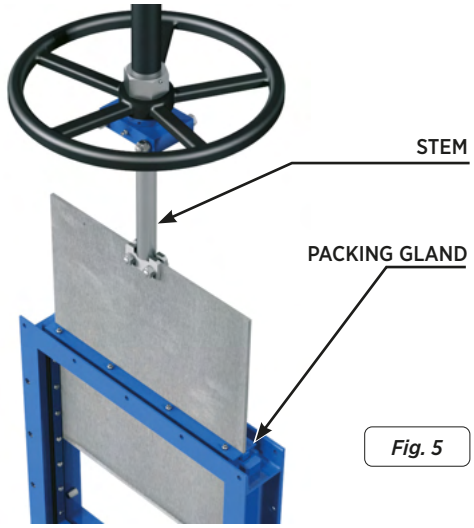

Fig. 5

7. ACCIONAMIENTOS

All types of actuators can be supplied, with the advantage that the **CMO Valves** design is fully interchangeable.

This design allows the customer to change the actuators themselves and no extra assembly accessories are required.

Manual Drives
Handwheel **(*)**
Chain handwheel **(*)**
Lever
Geared motor **(*)**
Others (square stem)

Availability of Accessories
Mechanical stoppers
Locking devices
Emergency manual drives
Electrovalves
Positioners
Limit switches
Proximity detectors
Straight floor stand (Fig. 4)
Leaning floor stand (Fig. 5)

Automatic Drives
Electric actuator **(*)**
D/E & S/E pneumatic cylinder
Hydraulic cylinder

(*) Available in rising and non-rising stem versions.

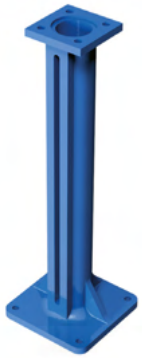

Fig. 6

COLUMNA DE MANIOBRA RECTA.

Fig. 7

COLUMNA DE MANIOBRA INCLINADA.

The handwheel, chainwheel, gear box and motor actuators are also available with non-rising stem. The pneumatic actuators can be single or double acting, and the single acting ones can also open or close the spring when there is no air supply.
Stem extensions have also been developed, allowing the actuator to be located far away from the valve, to suit all needs.
Please consult our technicians beforehand.

Fig. 8

H/A = RISING STEM
H/NA = NON-RISING STEM

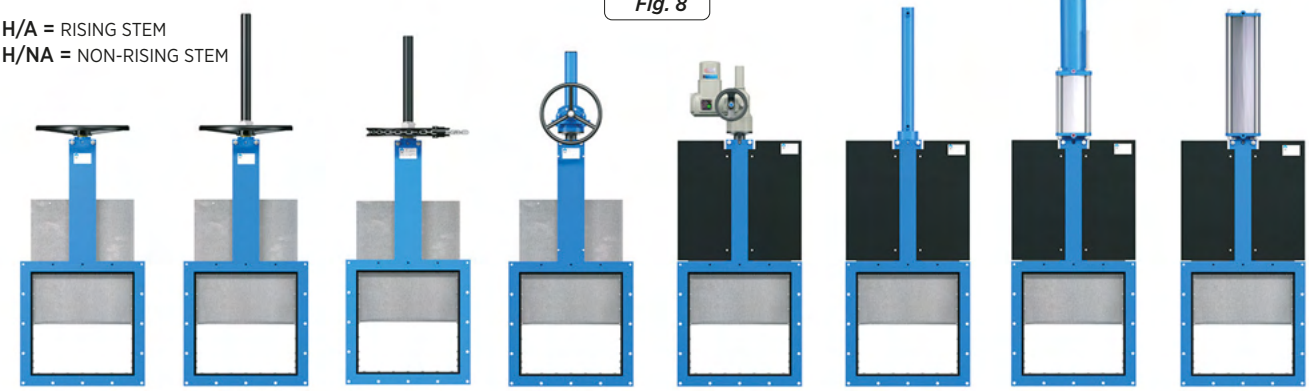

HANDWHEEL NON-RISING STEM	HANDWHEEL RISING STEM	CHAIN HANDWHEEL	HANDWHEEL GEAR-BOX	ELECTRIC-MOTOR ACTUSTOR	HYDRAULIC ACTUATOR	SINGLE-ACTING PNEUMATIC ACTUATOR	PNEUMATIC ACTUATOR
H/NA	**H/A**	**H/A** **H/NA**	**H/A** **H/NA**	**H/A** **H/NA**	**H/A**	**H/A**	**H/A**

Rev.02 / 11-07-2024

ACCESSORIES AND OPTIONS

Different accessories are available to adapt the valve to specific working conditions such as:

TAJADERA PULIDO ESPEJO
La tajadera pulido espejo esta especialmente recomendada en la industria alimentaria, como norma general, en aplicaciones en las que el fluido se puede adherir a la tajadera.

TAJADERA RECUBIERTA DE PTFE
Al igual que la tajadera pulido espejo, mejora las prestaciones de la válvula con productos que puedan adherirse a la tajadera.

TAJADERA ESTELLITADA
Aporte de estellite en el perímetro inferior de la tajadera para protegerla de la abrasión.

RASCADOR EN LA EMPAQUETADURA
Su función es limpiar la tajadera durante el movimiento de apertura y evitar posibles daños en la empaquetadura.

INYECCIONES DE AIRE EN LA EMPAQUETADURA
Mediante la inyección de aire en la empaquetadura se crea una cámara de aire que mejora la estanqueidad.

CUERPO ENCAMISADO
Recomendado en aplicaciones en las que el fluido se puede endurecer y solidificar dentro del cuerpo de la válvula. Una camisa exterior en el cuerpo mantiene constante la temperatura del mismo evitando la solidificación del fluido.

SOPORTE DE ACCIONAMIENTO O PUENTE
De acero (o de inoxidable bajo consulta), recubierto de EPOXI, su robusto diseño le confiere una gran rigidez, soportando las condiciones de operación más adversas.

FINALES DE CARRERA MECÁNICOS, DETECTORES INDUCTIVOS Y POSICIONADORES
Instalación de finales de carrera o detectores para indicación de posición puntual de la válvula y posicionadores para indicación de posición continua.

ELECTROVÁLVULAS
Para distribución del aire a los accionamientos neumáticos.

CONNECTION BOXES, WIRING AND PNEUMATIC PIPING
Fully assembled units can be supplied with all the necessary accessories.

STROKE LIMITING MECHANICAL STOPS
They allow the stroke to be mechanically adjusted, limiting the valve's desired run.

MECHANICAL LOCKING DEVICE
Allows the valve to be mechanically locked in a set position for long periods.

EMERGENCY MANUAL ACTUATOR (HAND WHEEL /GEAR BOX):
Allows manual operation of the valve in the event of power or air failure (Fig. 9).

FLUSHING HOLES IN BODY
Several holes are drilled in the body to flush air, steam or other fluids out with the aim of cleaning the valve seat before sealing.

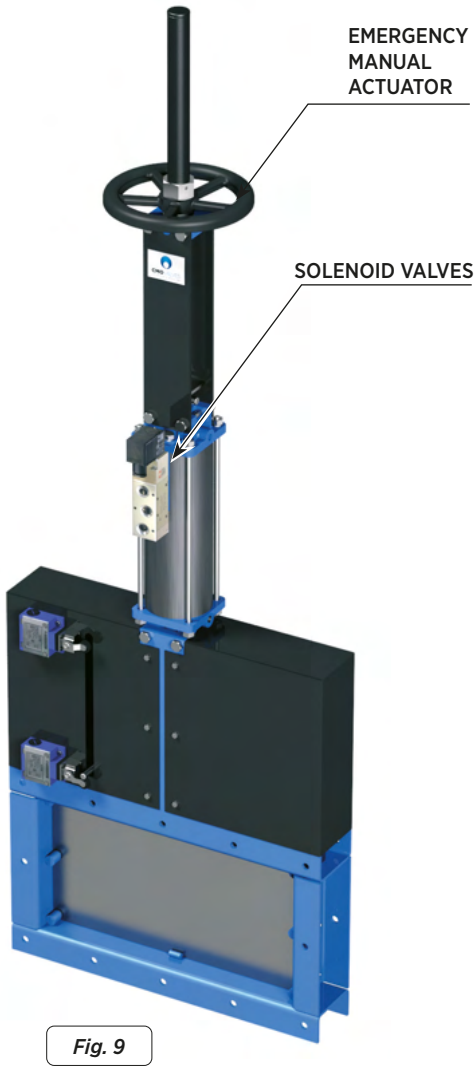

Fig. 9

Rev.02 / 11-07-2024

Fig. 10

INTERCHANGEABLE ACTUATORS
All actuators are easily interchangeable.

EPOXY COATING
All carbon steel bodies and components on **CMO Valves** valves are EPOXY coated, giving the valves great resistance to corrosion and an excellent finish. **CMO Valves** standard colour is blue, RAL-5015.

GATE SAFETY PROTECTION
In accordance with European Safety Standards ("EC" marking), automated valves are equipped with gate guards, to prevent any objects from being accidentally caught in the gate (Fig. 11).

BONNET
Provides total watertight integrity to the outside, reducing the packing gland maintenance required.

Fig. 11

Rev.02 / 11-07-2024

TYPES OF EXTENSION

When the valve needs to be operated from a distance, the following different types of actuators can be fitted:

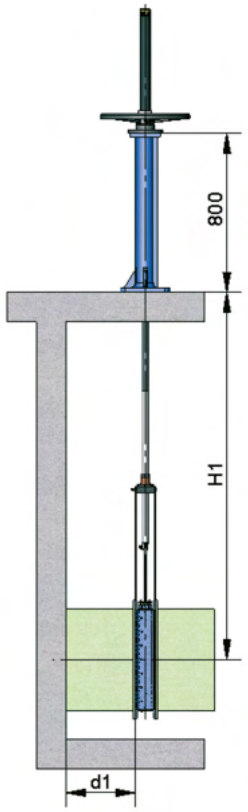

Fig. 13

STRAIGHT FLOOR STANDS

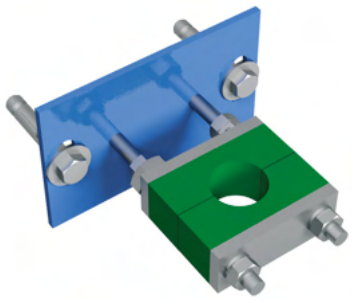

Fig. 14

SQUARE NUT SUPPORT

1.- FLOOR STAND

This extension is performed by coupling a rod to the stem. By defining the length of the rod, the desired extension is achieved. A floor stand is normally installed to support the actuator.

The definition variables are as follows:

H1 = Distance from the valve's shaft to the base of the stand

d1 = Separation from the wall to the end of the connecting flange.

CARACTERISTICS:

- It can be coupled to any type of actuator.
- A stem support-guide is recommended every 1.5 m.
- The standard floor stand is 800 mm high. Other floor stand measurements available on request.
- A position indicator can be fitted to determine the valve's percentage of opening.
- Possibility of leaning floor stand.

COLUMNA INCLINADA.

Fig. 15

COMPONENTS LIST

COMPONENT	STANDARD VERSION
Stem	AISI 304
Rod	AISI 304
Support-Guide	Carbon steel with EPOXY coating
Guide	PA6
Stand	GJS500 with EPOXY coating

Table. 4

Rev.02 / 11-07-2024

2.- PIPE

This consists of raising the drive. The pipe will rotate in the same direction as the wheel when the valve is operated. The valve always remains at the same height.

The definition variables are as follows:

H1 = Distance from the valve's shaft to the base of the stand

d1 = Separation from the wall to the end of the connecting flange.

CARACTERISTICS:

- Standard drives: handwheel and top square.
- A pipe guide bracket is recommended every 1.5 m.
- The standard materials are: EPOXY-coated carbon steel and stainless steel.

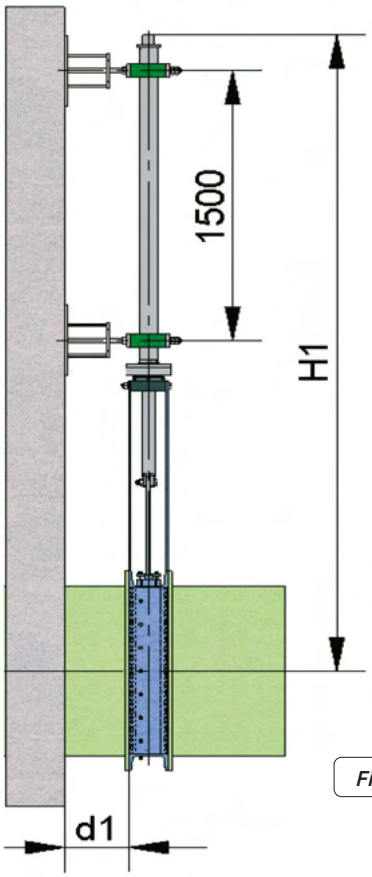

Fig. 16

3.- EXTENDED SUPPORT PLATES

When a short extension is required, it can be achieved by extending the support plates. An intermediate yoke can be fitted to reinforce the support plates' structure.

Fig. 17

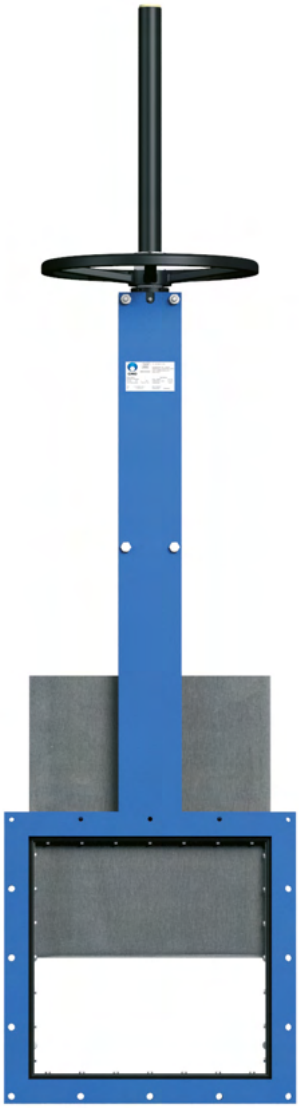

4.- CARDAN

If the valve and the drive are not in correct alignment, the problem can be resolved by fi tting a universal cardan joint. This option is only valid for non-rising stem drives.

Fig. 18

Nota: It is possible to place a position indicator on the steering column.

Rev.02 / 11-07-2024

RISING-STEM HANDWHEEL

OPTIONS

- Locking devices.
- Extensions: stand, pipe, plates...
- Dimensions (W x T) higher than those give in the table.

ACTUATOR

- Handwheel
- Stem.
- Nut.
- Stem protection hood.

AVAILABLE

- From 125 x 125 to 1400 x 1400
- From dimensions (W x T) of 900 x 900 the actuator is supplied with gear box.
- Rectangular W x T can also be manufactured.

** Other dimensions on request.*

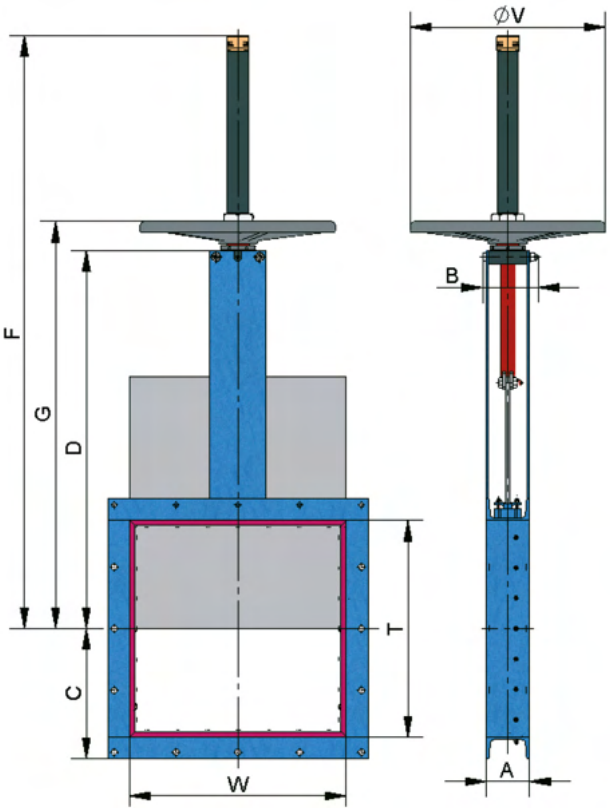

Fig. 19

W x T	ΔP (bar)	A	B	C	D	F	G	øV
125 x 125	0,6	80	102	107,5	281,5	496	317	225
150 x 150	0,6	80	102	120	319	534	354	225
200 x 200	0,6	80	102	145	394	650	429	225
250 x 250	0,6	80	111	170	471	802	524	325
300 x 300	0,6	80	111	195	546	935	599	325
350 x 350	0,6	100	116	225	621	1060	674	325
400 x 400	0,6	100	116	250	697	1185	749	325
450 x 450	0,6	100	128	275	785	1338	852	450
500 x 500	0,6	100	128	300	864	1465	929	450
550 x 550	0,6	100	128	325	939	1590	1004	450
600 x 600	0,6	100	128	350	1014	1715	1079	450
650 x 650	0,6	100	128	375	1089	1840	1154	450
700 x 700	0,6	120	148	405	1178	1981	1245	450
750 x 750	0,6	120	148	430	1253	2106	1320	450
800 x 800	0,6	120	148	455	1328	2231	1395	450
900 x 900	0,6	140	168	510	1478	2481	1545	450
1000 x 1000	0,6	140	168	560	1628	2746	1695	--
1200 x 1200	0,6	160	186	665	1929	3280	2040	--
1400 x 1400	0,6	160	218	765	2229	3760	2340	--

Table. 5

Rev.02 / 11-07-2024

RISING-STEM HANDWHEEL

Suitable when no size limitations exist.

OPTIONS

- Square nut.
- Locking devices.
- Extensions: stand, pipe, plates...
- Dimensions (W x T) higher than those give in the table.

ACTUATOR

- Handwheel.
- Stem.
- Guide bearings on the yoke.
- Nut.

AVALAIBLE

- From 125 x 125 to 1400 x 1400
- Rectangular W x T can also be manufactured.
- From dimensions (W x T) of 900 x 900 the actuator is supplied with gear box.

** Other dimensions on request.*

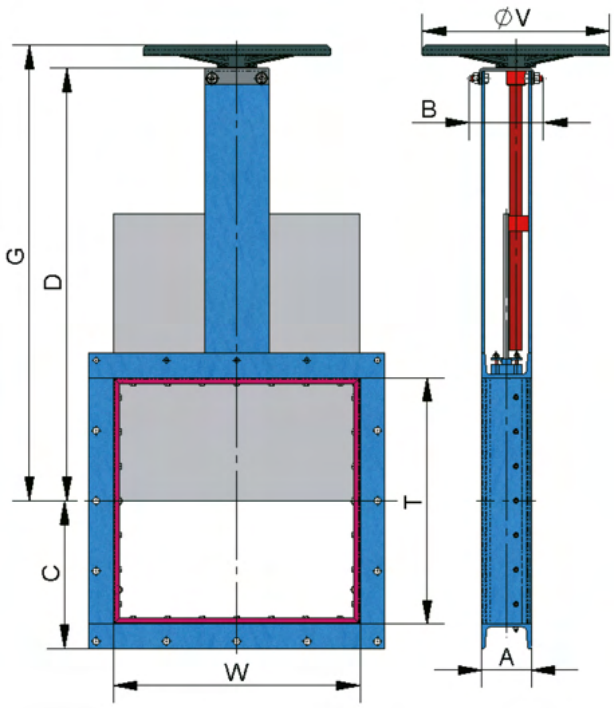

Fig. 20

W x T	ΔP (bar)	A	B	C	D	G	øV
125 x 125	0,6	80	102	107,5	281,5	317	225
150 x 150	0,6	80	102	120	319	354	225
200 x 200	0,6	80	102	145	394	429	225
250 x 250	0,6	80	111	170	471	524	325
300 x 300	0,6	80	111	195	546	599	325
350 x 350	0,6	100	116	225	621	674	325
400 x 400	0,6	100	116	250	697	749	325
450 x 450	0,6	100	128	275	785	852	450
500 x 500	0,6	100	128	300	864	929	450
550 x 550	0,6	100	128	325	939	1004	450
600 x 600	0,6	100	128	350	1014	1079	450
650 x 650	0,6	100	128	375	1089	1154	450
700 x 700	0,6	120	148	405	1178	1245	450
750 x 750	0,6	120	148	430	1253	1320	450
800 x 800	0,6	120	148	455	1328	1395	450
900 x 900	0,6	140	168	510	1478	1545	450
1000 x 1000	0,6	140	168	560	1628	1695	--
1200 x 1200	0,6	160	186	665	1929	2040	--
1400 x 1400	0,6	160	218	765	2229	2340	--

Table. 6

Rev.02 / 11-07-2024

CHAINWHEEL

Widely used in raised installations with difficult access, the handwheel is fitted in vertical position.

OPTIONS

- Locking devices.
- Extensions: stand, pipe, plates...
- Non-rising stem.
- Dimensions (W x T) higher than those give in the table.

INCLUDING

- Handwheel
- Stem.
- Nut.
- Hood.
- Chain.

AVALAIBLE

- From 125 x 125 to 1400 x 1400
- From dimensions (W x T) of 900 x 900 the actuator is supplied with gear box, see * in table.
- Rectangular W x T can also be manufactured.

** Other dimensions on request.*

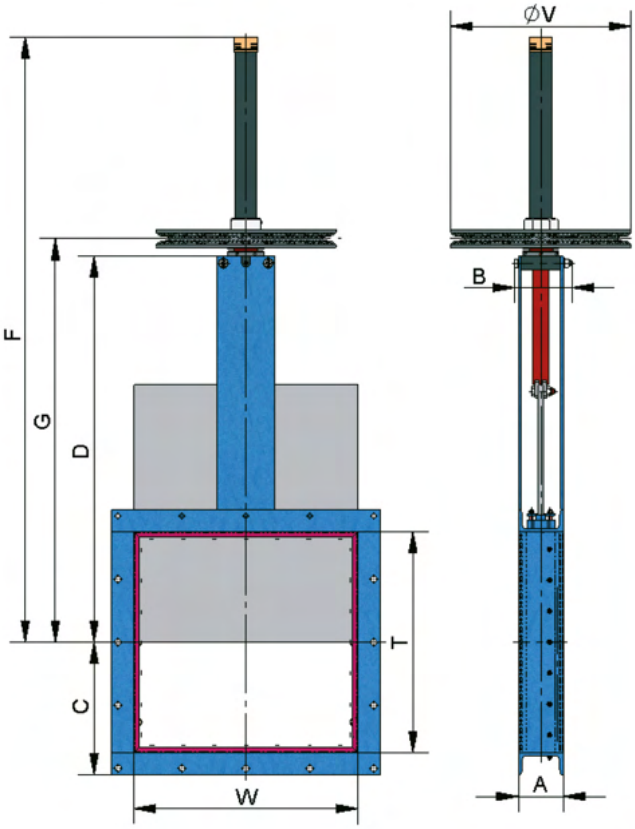

Fig. 21

W x T	ΔP (bar)	A	B	C	D	F	G	øV
125 x 125	0,6	80	102	107,5	281,5	496	317	225
150 x 150	0,6	80	102	120	319	534	354	225
200 x 200	0,6	80	102	145	394	650	429	225
250 x 250	0,6	80	111	170	471	802	524	300
300 x 300	0,6	80	111	195	546	935	599	300
350 x 350	0,6	100	116	225	621	1060	674	300
400 x 400	0,6	100	116	250	697	1185	749	300
450 x 450	0,6	100	128	275	785	1338	852	402
500 x 500	0,6	100	128	300	864	1465	929	402
550 x 550	0,6	100	128	325	939	1590	1004	402
600 x 600	0,6	100	128	350	1014	1715	1079	402
650 x 650	0,6	100	128	375	1089	1840	1154	402
700 x 700	0,6	120	148	405	1178	1981	1245	402
750 x 750	0,6	120	148	430	1253	2106	1320	402
800 x 800	0,6	120	148	455	1328	2231	1395	402
900 x 900	0,6	140	168	510	1478	2481	1545	402
1000 x 1000	0,6	140	168	560	1628	2746	1695	402*
1200 x 1200	0,6	160	186	665	1929	3280	2040	402*
1400 x 1400	0,6	160	218	765	2229	3760	2340	402*

Table. 7

Rev.02 / 11-07-2024

GEAR-BOX

OPTIONS

- Chainwheel.
- Locking devices.
- Extensions: stand, pipe, plates...
- Non-rising stem.

INCLUDING

- Stem.
- Yoke.
- Cone-shaped gear box.
- Handwheel.
- Standard ratio reducction 4 - 1 .

AVALAIBLE

- From 125 x 125 to 1400 x 1400
- From dimensions (W x T) of 900 x 900 the actuator is supplied with gear box, see * in table.
- Rectangular W x T can also be manufactured.

** Otros DN bajo consulta.*

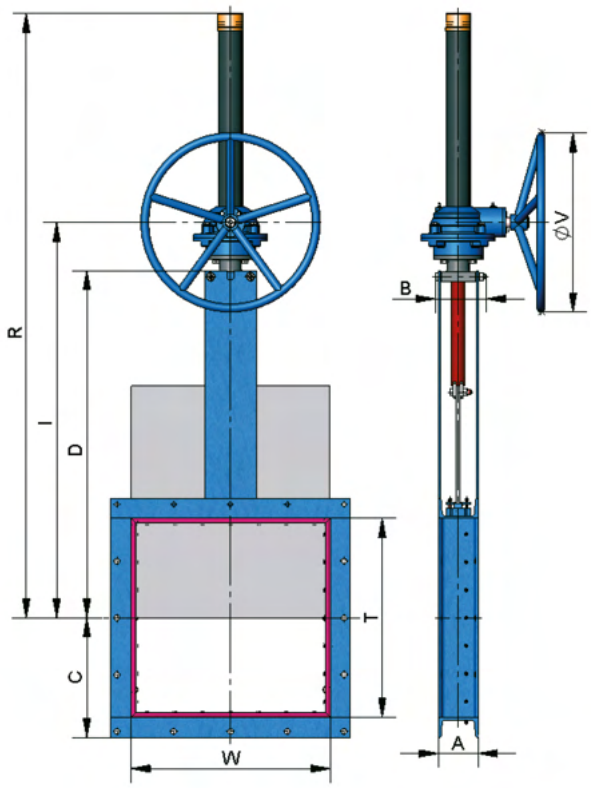

Fig. 22

W x T	ΔP (bar)	A	B	C	D	I	R	øV
125 x 125	0,6	80	102	107,5	281,5	401	556	300
150 x 150	0,6	80	102	120	319	439	619	300
200 x 200	0,6	80	102	145	394	514	744	300
250 x 250	0,6	80	111	170	471	589	869	300
300 x 300	0,6	80	111	195	546	667	994	300
350 x 350	0,6	100	116	225	621	744	1124	300
400 x 400	0,6	100	116	250	697	819	1249	300
450 x 450	0,6	100	128	275	785	904	1384	450
500 x 500	0,6	100	128	300	864	981	1511	450
550 x 550	0,6	100	128	325	939	1056	1636	450
600 x 600	0,6	100	128	350	1014	1131	1761	450
650 x 650	0,6	100	128	375	1089	1206	1886	450
700 x 700	0,6	120	148	405	1178	1297	2027	450
750 x 750	0,6	120	148	430	1253	1372	2152	450
800 x 800	0,6	120	148	455	1328	1447	2277	450
900 x 900	0,6	140	168	510	1478	1597	2527	450
1000 x 1000	0,6	140	168	560	1628	1747	2777	450
1200 x 1200	0,6	160	186	665	1929	2011	3251	650
1400 x 1400	0,6	160	218	765	2229	2311	3751	650

Table. 8

Rev.02 / 11-07-2024

DOUBLE-ACTING PNEUMATIC CYLINDER

- The air supply pressure to the cylinder is a minimum of 6 bar and a maximum of 10 bar, the air must be dry and lubricated.
- For pneumatic cylinders up to Ø200, the jacket and covers are made of aluminium, the rod is AISI304, the piston is rubber-coated steel and the O-ring seals are made of nitrile. For cylinders larger than Ø200 the covers are made of nodular cast iron or carbon steel.
- On request, we can also supply the actuator made entirely of stainless steel, especially for installation in corrosive atmospheres.

AVALAIBLE

- From 125 x 125 to 1400 x 1400
- Rectangular W x T can also be manufactured

** Other dimensions on request*

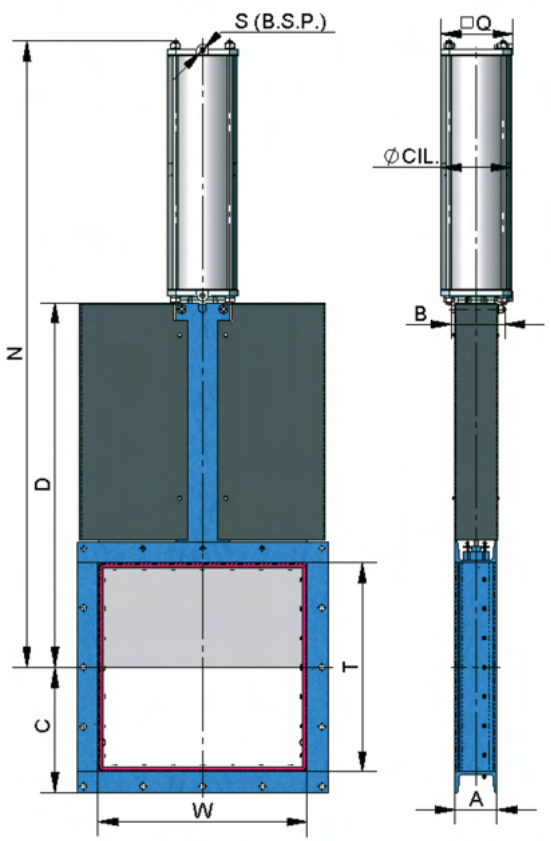

Fig. 23

W x T	ΔP (bar)	A	B	C	D	N	Q	Ø CIL.	Ø VAST.	S (B.S.P.)
125 x 125	0,6	80	102	107,5	281,5	511	90	Ø80	Ø20	1/4"
150 x 150	0,6	80	102	120	319	574	90	Ø80	Ø20	1/4"
200 x 200	0,6	80	102	145	394	699	90	Ø80	Ø20	1/4"
250 x 250	0,6	80	102	170	471	824	90	Ø80	Ø20	1/4"
300 x 300	0,6	80	102	195	546	949	90	Ø80	Ø20	1/4"
350 x 350	0,6	100	116	225	621	1074	110	Ø100	Ø20	1/4"
400 x 400	0,6	100	116	250	697	1215	135	Ø125	Ø25	1/4"
450 x 450	0,6	100	128	275	785	1351	135	Ø125	Ø25	1/4"
500 x 500	0,6	100	128	300	864	1486	170	Ø160	Ø30	1/4"
550 x 550	0,6	100	128	325	939	1611	170	Ø160	Ø30	1/4"
600 x 600	0,6	100	128	350	1014	1736	170	Ø160	Ø30	1/4"
650 x 650	0,6	100	128	375	1089	1861	170	Ø160	Ø30	1/4"
700 x 700	0,6	120	148	405	1178	2014	215	Ø200	Ø30	3/8"
750 x 750	0,6	120	148	430	1253	2182	270	Ø250	Ø40	3/8"
800 x 800	0,6	120	148	455	1328	2307	270	Ø250	Ø40	3/8"
900 x 900	0,6	140	168	510	1478	2560	270	Ø250	Ø40	3/8"
1000 x 1000	0,6	140	168	560	1628	2815	382	Ø300	Ø45	1/2"
1200 x 1200	0,6	160	186	665	1929	3310	426	Ø350	Ø45	1/2"
1400 x 1400	0,6	160	218	765	2229	3877	508	Ø400	Ø50	1/2"

Table. 9

Rev.02 / 11-07-2024

SINGLE-ACTING PNEUMATIC CYLINDER

- Available for opening or closing in case of air supply failure (spring opening or closing).
- The actuator design is spring activated for 300x300 valves. For larger strokes the actuator contains a double-acting cylinder and an air tank which stores the volume of air necessary to perform the last movement in the event of a air supply failure.
- The jacket is made of aluminium, the covers of nodular cast iron or carbon steel, the rod of AISI304, the piston of rubber-coated steel and the O-ring seals of nitrile

AVALAIBLE

- From 125 x 125 to 300x 300
- Rectangular W x T can also be manufactured

** Other dimensions on request*

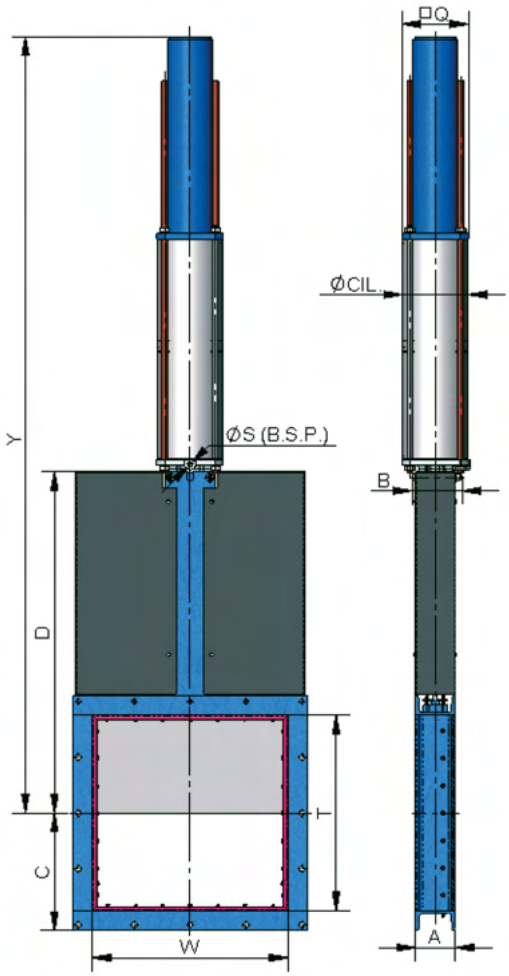

Fig. 24

W x T	ΔP (bar)	A	B	C	D	Y	Q	Ø CIL.	Ø VAST	S (B.S.P.)
125 x 125	0,6	80	102	107,5	281,5	816	135	Ø125	Ø25	1/4"
150 x 150	0,6	80	102	120	319	861	135	Ø125	Ø25	1/4"
200 x 200	0,6	80	102	145	394	939	135	Ø125	Ø25	1/4"
250 x 250	0,6	80	111	170	471	1130	135	Ø125	Ø25	1/4"
300 x 300	0,6	80	111	195	546	1255	135	Ø125	Ø25	1/4"

Table. 10

Rev.02 / 11-07-2024

ELECTRIC ACTUATOR

This actuator is automatic and includes the following parts:

- Electric motor
- Stem.
- Yoke.

THE ELECTRIC MOTOR INCLUDES

- Emergency manual handwheel.
- Limit switches.
- Torque switches.

OPTIONS

- Different types and brands.
- Non-rising stem.
- ISO 5210 / DIN 3338 Flanges.

AVALAIBLE

- From 125 x 125 to 1400 x 1400
- Rectangular W x T can also be manufactured.
- From dimensions (W x T) of 900 x 900 the motor uses a gear box.

** Other dimensions on request*

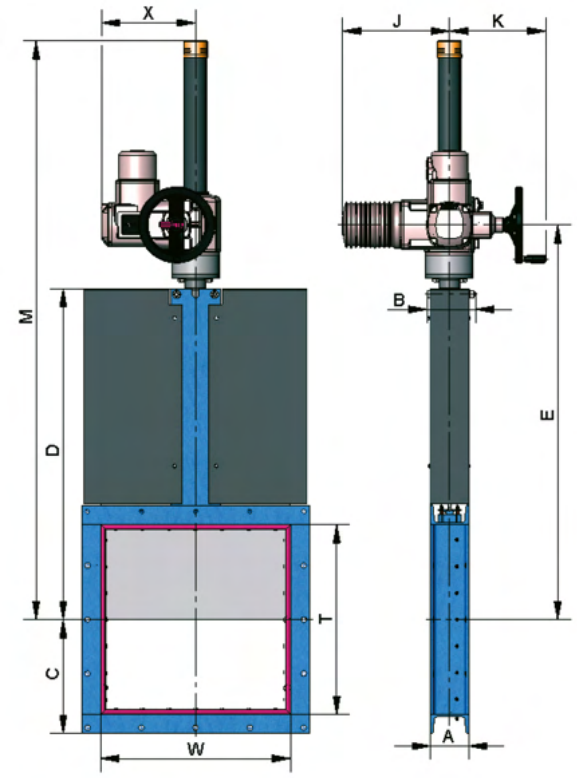

Fig. 25

W x T	ΔP (bar)	A	B	C	D	E	J	K	M	X
125 x 125	0,6	80	102	108	282	436	265	250	631	237
150 x 150	0,6	80	102	120	319	473	265	250	668	237
200 x 200	0,6	80	102	145	394	548	265	250	743	237
250 x 250	0,6	80	111	170	471	623	265	250	831	237
300 x 300	0,6	80	111	195	546	698	265	250	956	237
350 x 350	0,6	100	116	225	621	778	265	250	1086	237
400 x 400	0,6	100	116	250	697	853	265	250	1211	237
450 x 450	0,6	100	128	275	785	950	265	250	1365	237
500 x 500	0,6	100	128	300	864	1027	265	250	1492	237
550 x 550	0,6	100	128	325	939	1102	265	250	1617	237
600 x 600	0,6	100	128	350	1014	1177	265	250	1742	237
650 x 650	0,6	100	128	375	1089	1252	265	250	1867	237
700 x 700	0,6	120	148	405	1178	1343	283	250	2008	247
750 x 750	0,6	120	148	430	1253	1418	283	250	2133	247
800 x 800	0,6	120	148	455	1328	1493	283	250	2258	247
900 x 900	0,6	140	168	510	1478	1643	283	250	2508	247
1000 x 1000	0,6	140	168	560	1628	1793	389	256	2758	247
1200 x 1200	0,6	160	186	665	1929	2084	389	256	3229	286
1400 x 1400	0,6	160	218	765	2229	2384	389	256	3729	286

Table. 11

Rev.02 / 11-07-2024

HYDRAULIC ACTUATOR

The hydraulic actuator includes :

- Hydraulic cylinder.
- Yoke

Different types and brands available according to customer's requirements.

AVALAIBLE

- From 125 x 125 to 1400 x 1400.
- Posibilidad de fabricación de W x T rectangulares.

** Other dimensions on request*

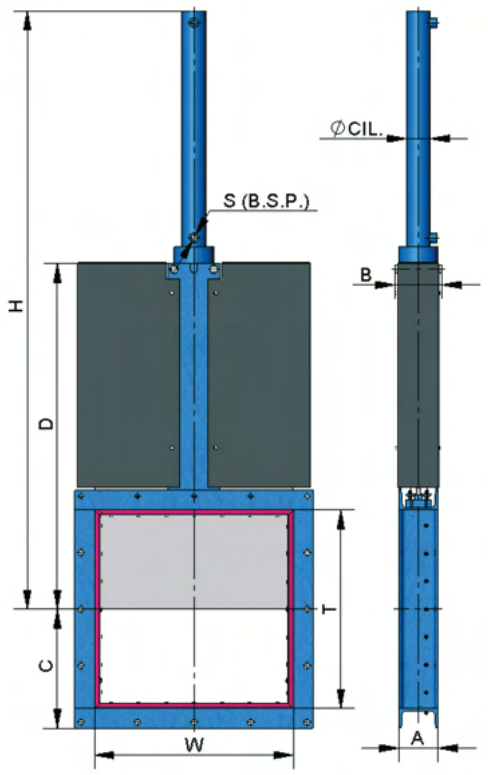

Fig. 26

W x T	ΔP (bar)	A	B	C	D	H	Ø CIL.	Ø VAST.	S (B.S.P.)
125 x 125	0,6	80	102	108	282	561	Ø25	Ø18	3/8"
150 x 150	0,6	80	102	120	319	623	Ø25	Ø18	3/8"
200 x 200	0,6	80	102	145	394	723	Ø25	Ø18	3/8"
250 x 250	0,6	80	111	170	471	903	Ø25	Ø18	3/8"
300 x 300	0,6	80	111	195	546	1028	Ø25	Ø18	3/8"
350 x 350	0,6	100	116	225	621	1156	Ø32	Ø22	3/8"
400 x 400	0,6	100	116	250	697	1286	Ø32	Ø22	3/8"
450 x 450	0,6	100	128	275	785	1421	Ø32	Ø22	3/8"
500 x 500	0,6	100	128	300	864	1558	Ø40	Ø22	3/8"
550 x 550	0,6	100	128	325	939	1683	Ø40	Ø22	3/8"
600 x 600	0,6	100	128	350	1014	1808	Ø40	Ø22	3/8"
650 x 650	0,6	100	128	375	1089	1933	Ø50	Ø28	3/8"
700 x 700	0,6	120	148	405	1178	2097	Ø50	Ø28	3/8"
750 x 750	0,6	120	148	430	1253	2222	Ø50	Ø28	3/8"
800 x 800	0,6	120	148	455	1328	2347	Ø50	Ø28	3/8"
900 x 900	0,6	140	168	510	1478	2597	Ø63	Ø36	3/8"
1000 x 1000	0,6	140	168	560	1628	2847	Ø63	Ø36	3/8"
1200 x 1200	0,6	160	186	665	1929	3387	Ø80	Ø45	3/8"
1400 x 1400	0,6	160	218	765	2229	3918	Ø100	Ø56	1/2"

Table. 12

Rev.02 / 11-07-2024

FLANGE DIMENSIONS

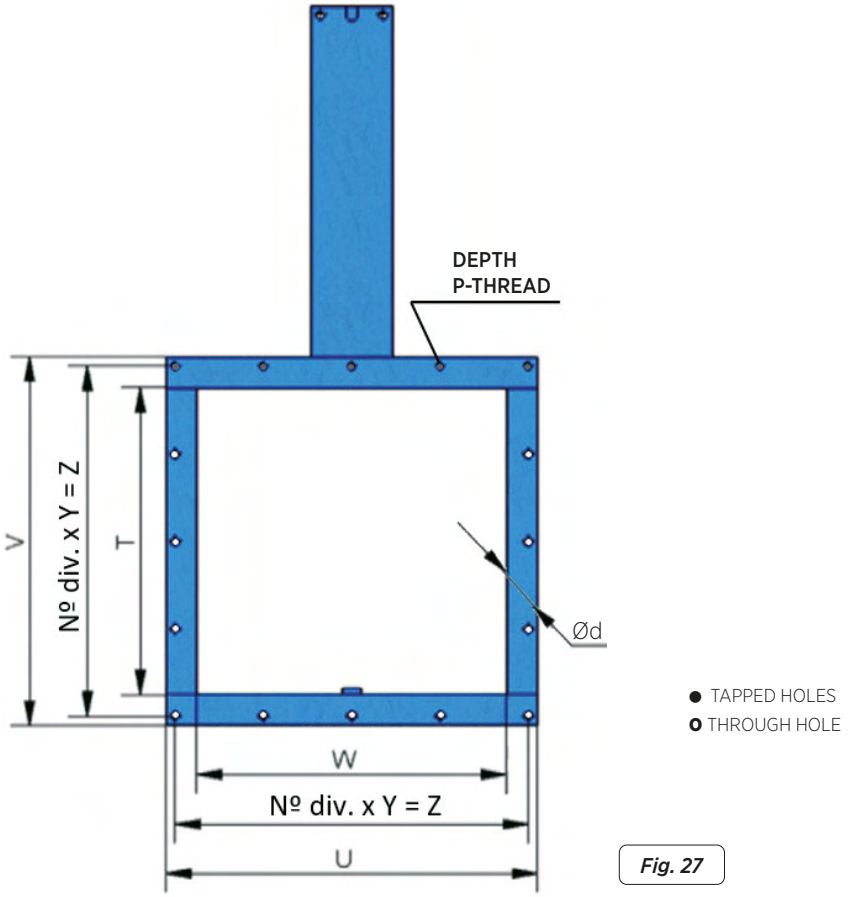

Fig. 27

W x T	ΔP (bar)	●	Metric	o	Ød	P	U x V	Nº div. x Y = Z
125 x 125	0,6	3	M 10	5	12	8	215x215	2 x 92,5 = 185
150 x 150	0,6	3	M 10	5	12	8	240x240	2 x 105 = 210
200 x 200	0,6	3	M 10	5	12	8	290x290	2 x 130 = 260
250 x 250	0,6	3	M 10	5	12	8	340x340	2 x 155 = 310
300 x 300	0,6	4	M 10	8	12	8	390x390	3 x 120 = 360
350 x 350	0,6	4	M 12	8	14	8,5	450x450	3 x 140 = 420
400 x 400	0,6	5	M 12	11	14	8,5	500x500	4 x 117,5 = 470
450 x 450	0,6	5	M 12	11	14	8,5	550x550	4 x 130 = 520
500 x 500	0,6	5	M 12	11	14	8,5	600x600	4 x 142,5 = 570
550 x 550	0,6	5	M 12	11	14	8,5	650x650	4 x 155 = 620
600 x 600	0,6	5	M 12	11	14	8,5	700x700	4 x 167,5 = 670
650 x 650	0,6	5	M 12	11	14	8,5	750x750	4 x 180 = 720
700 x 700	0,6	6	M 12	14	14	9	810x810	5 x 155 = 775
750 x 750	0,6	6	M 12	14	14	9	860x860	5 x 166 = 830
800 x 800	0,6	6	M 12	14	14	9	910x910	5 x 175 = 875
900 x 900	0,6	7	M 12	17	14	10	1020x1020	6 x 162,5 = 975
1000 x 1000	0,6	8	M 12	20	14	10	1120x1120	7 x 155 = 1085
1200 x 1200	0,6	8	M 12	20	14	10,5	1320x1320	7 x 184,5 = 1291,5
1400 x 1400	0,6	8	M 12	20	14	10,5	1520x1520	7 x 213 = 1491

Table. 13

ARNETT
ENGINEERED SOLUTIONS

ARNETT ENGINEERED SOLUTIONS
61 INNOVATION DRIVE, BAMBERG, SC 29003
(844) 785-7585 | SALES@ARNETT.COM
WWW.ARNETT.COM