ARNETT
ENGINEERED SOLUTIONS

23D SERIES

FABRICATION RANGE
DOUBLE FLANGE BUTTERFLY VALVES

UTILIZATION:

- Double flange butterfly valve used for regulation and flow sectioning in water supply facilities, plumbing, irrigation, etc.
- It has low head loss due to a hydrodynamic design of the disc, it is 100% water tight and need no gaskets to be installed.

SERIES - 23

DOUBLE FLANGE BUTTERFLY VALVES

Rev.02 / 11-07-2024

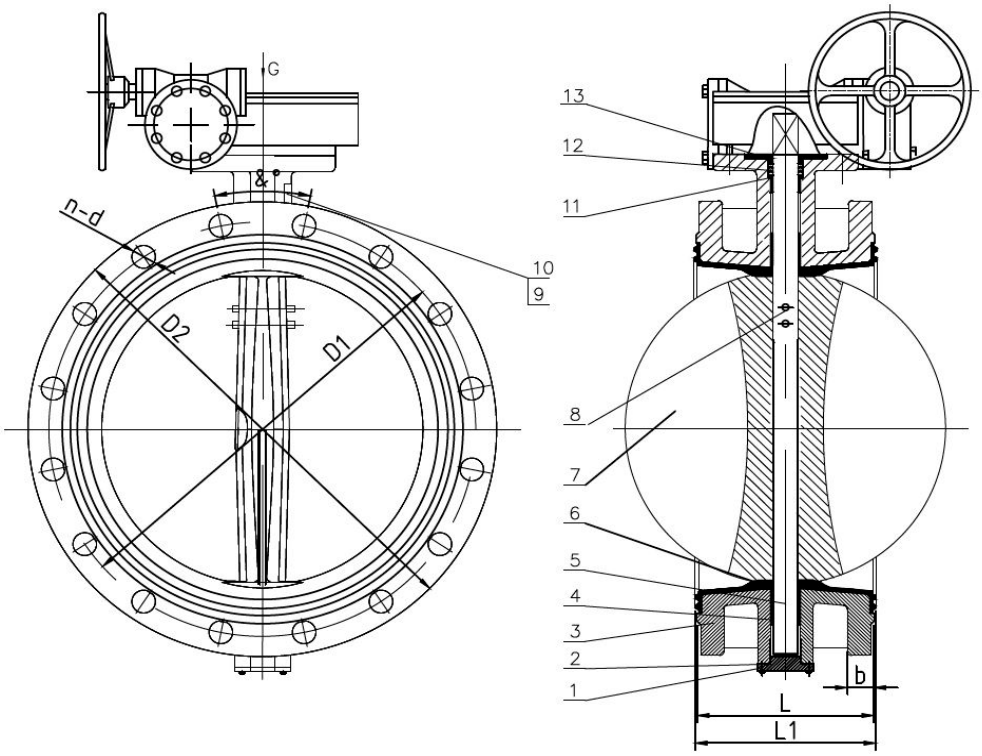

DIMENSIONS

DN	L	L1	D1		D2		n-d		&	b	ISO5211	Shaft
			PN10	PN16	PN10	PN16	PN10	PN16				
50	108	111	125		165		4-19		90	19	F07	11x11
65	112	115	145		185		4-19		90	19	F07	11x11
80	114	117	160		200		8-19		45	19	F07	11x11
100	127	130	180		220		8-19		45	19	F07	11x11
125	140	143	210		250		8-19		45	19	F07	14x14
150	140	143	240		280		8-23		45	19	F07	14x14
200	152	155	295	295	340	340	8-23	12-23	45	20	F10	17x17
250	165	168	350	355	395	405	12-23	12-28	30	22	F10	22x22
300	178	182	400	410	445	460	12-23	12-28	30	24,5	F10	22x22
350	190	194	450	470	505	520	16-23	16-28	22,5	24,5	F10	22x22
400	216	221	515	525	565	580	16-28	16-31	22,5	24,5	F14	27x27
450	222	227	565	585	615	640	20-28	20-31	18	25,5	F14	27x27
500	229	234	620	650	670	715	20-28	20-34	18	26,5	F14	36x36
600	267	272	725	770	780	840	20-31	20-37	18	30	F16	36x36
700	292	297	840	840	895	910	24-31	24-37	15	32,5	F25	
800	318	323	950	950	1015	1025	24-34	24-40	15	35	F25	
900	330	335	1050	1050	1115	1125	28-34	28-40	12,86	37,5	F25	
1000	410	415	1160	1170	1230	1255	28-37	28-32	12,86	40	F25	
1200	470	475	1380	1390	1455	1485	32-41	32-49	11,25	45	F30	

SERIES - 23

DOUBLE FLANGE BUTTERFLY VALVES

Rev.02 / 11-07-2024

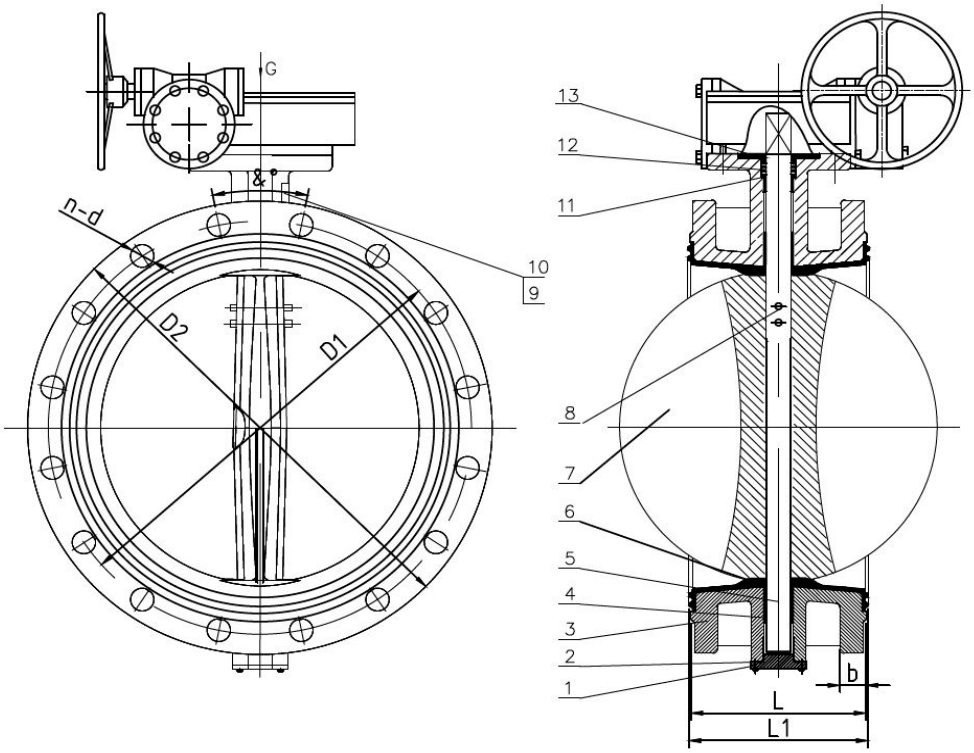

DESCRIPTION

1	*Lower cap*	*GJS400*
2	*Joint*	*NBR*
3	*Body*	*GJS400*
4	*Bushes*	*Bronze*
5	*Shaft*	*AISI420*
6	*Seat*	*EPDM*
7	*Disc*	*GJS400 / CF8M*
8	*Pin*	*AISI316*
9	*Rivet (under request)*	*Stainless Steel*
10	*Nameplate (under request)*	*Stainless Steel*
11	*Bushes*	*Bronze*
12	*Packing*	*NBR*
13	*Packing gland*	*Carbon steel*
	Painting RAL 5015	*Epoxi 250 microns*

GENERAL FEATURES:

- Low head loss.
- Vulcanized seat that avoids the contact between fluid and cast iron, avoiding corrosion and damages.
- 100% water tight.
- Bidirectional flow.
- Polished disc borders to avoid damage in the seat.
- No gaskets needed for installation.
- Max. working pressure 10 or 16 bar according to PN.
- Working temperature between -10ºC and 90ºC.

STANDARDS APPLIED:

- Hydrostatic tests according to EN 12266-1, class A.
- EC directive.
- Side flanges according to ISO 7005-2.
- Distance between flanges according to EN 558 series 13.
- Top flange according to ISO 5211.

The images and drawings are non contractual.
The specifications of the shown products could vary without previous notice.

ARNETT
ENGINEERED SOLUTIONS

ARNETT ENGINEERED SOLUTIONS
61 INNOVATION DRIVE, BAMBERG, SC 29003

(844) 785-7585 | SALES@ARNETT.COM

WWW.ARNETT.COM